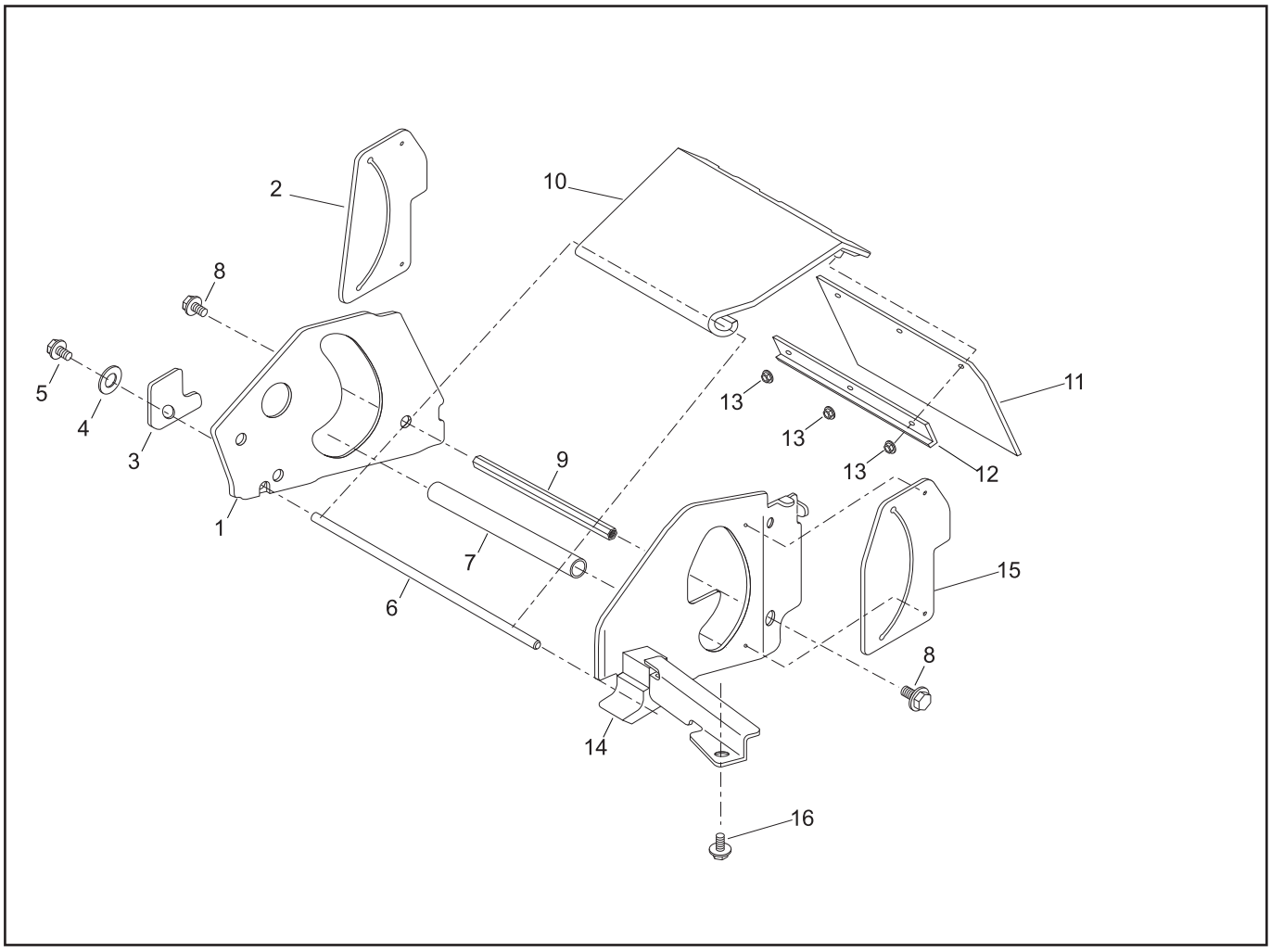

PARTS LIST

COVER UNIT (for 51043-151)

P/L No. 46014-550-00

NOTE	REF. No.	PARTS No.	PARTS NAME	COVER UNIT Q'TY	INCLUDING	PRICE( )	1/1 RECOMM.(%) Lot.100	Dec. 25. 2006 REMARKS
	1	11006 166	STAY C.P.	1				
	2	36080 154	RUBBER SHEET	1				
	3	11113 420	STAY	1				
	4	613L 0800	PLAIN WASHER	1				
	5	423U 0812	SOCKET SCREW FLANGE	1				
	6	64014 373	SHAFT	1				
	7	11083 387	COLLAR	1				
	8	31057 181	HEXAGON BOLT	2				
	9	64014 374	SHAFT	1				
	10	51079 124	COVER C.P.	1				
	11	36080 153	RUBBER SHEET	1				
	12	11050 182	FIXING PLATE	1				
	13	569L 0400	FLANGE NYLON NUT	3				
	14	11006 167	STAY C.P.	1				
	15	36080 155	RUBBER SHEET	1				
	16	342L 0612	FLANGE TAPPING BOLT	1				
	17							
	18							
	19							
	20							
	21							
	22							
	23							
	24							
	25							
	26							
	27							
	28							